eWICKLER

Comfort eW820, eW825, eW840-F, eW845-F

Electronic belt winder

OPERATING INSTRUCTIONS

Operating and assembly instructions

MADE IN GERMANY

www.wir-elektronik.de

WIR elektronik

EXPLANATION

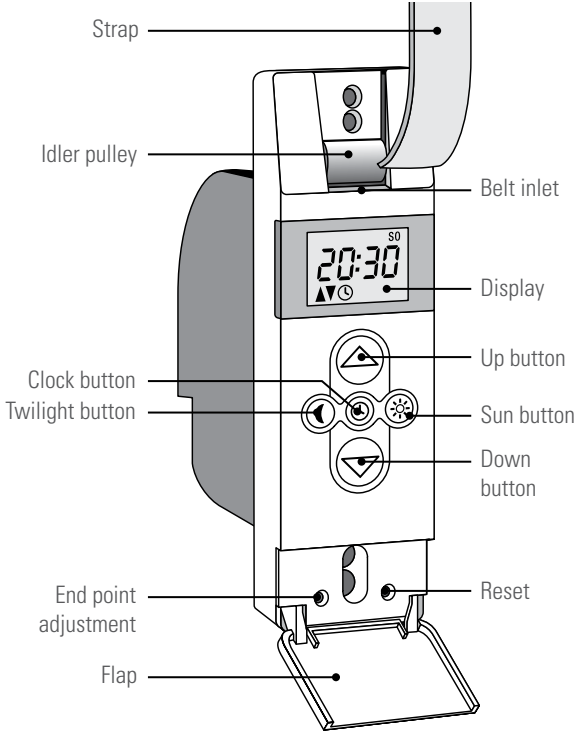

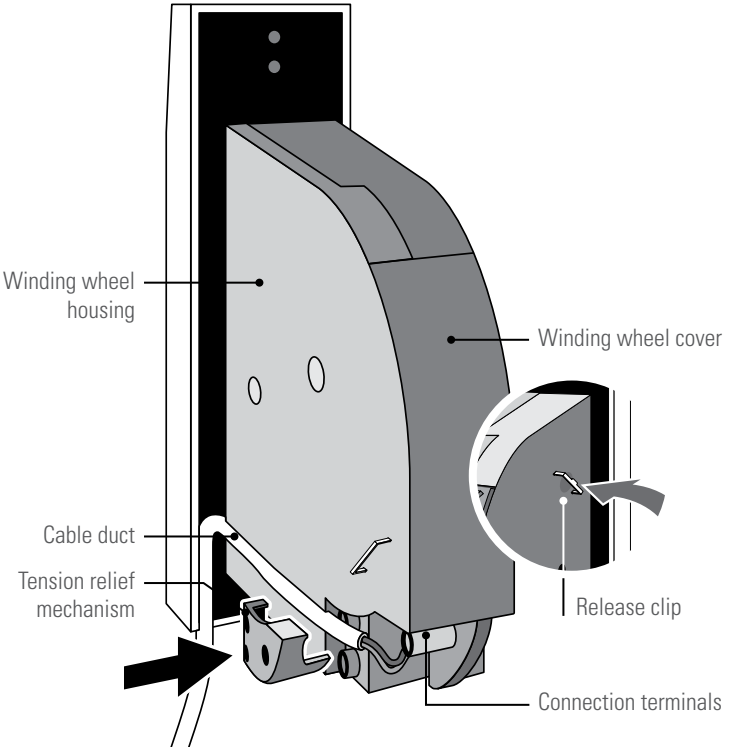

WELCOME

Dear Customer,

By purchasing an eWickler Comfort, you have opted for a quality "Made in Germany" product. We produce our products at our site in Stadtlohn in the Münsterland region - where development, technology, production and sales are combined under one roof.

We have one goal in mind with all our developments: We don't want to make life more technical, but instead more convenient and easier. All our WIR products are therefore designed in such a way that they can be used immediately, are easy to operate and are completely self-explanatory. Simply smart - that's WIR.

Best regards, Wilhelm Rademacher

These operating instructions describe how to install and operate the roller shutter belt winder. Please read these operating instructions carefully before using the eWickler for the first time and observe the safety instructions. These operating instructions are part of the eWickler. Keep them in a safe place. If the eWickler is passed on to a third party, please enclose these operating instructions.

SCOPE OF DELIVERY

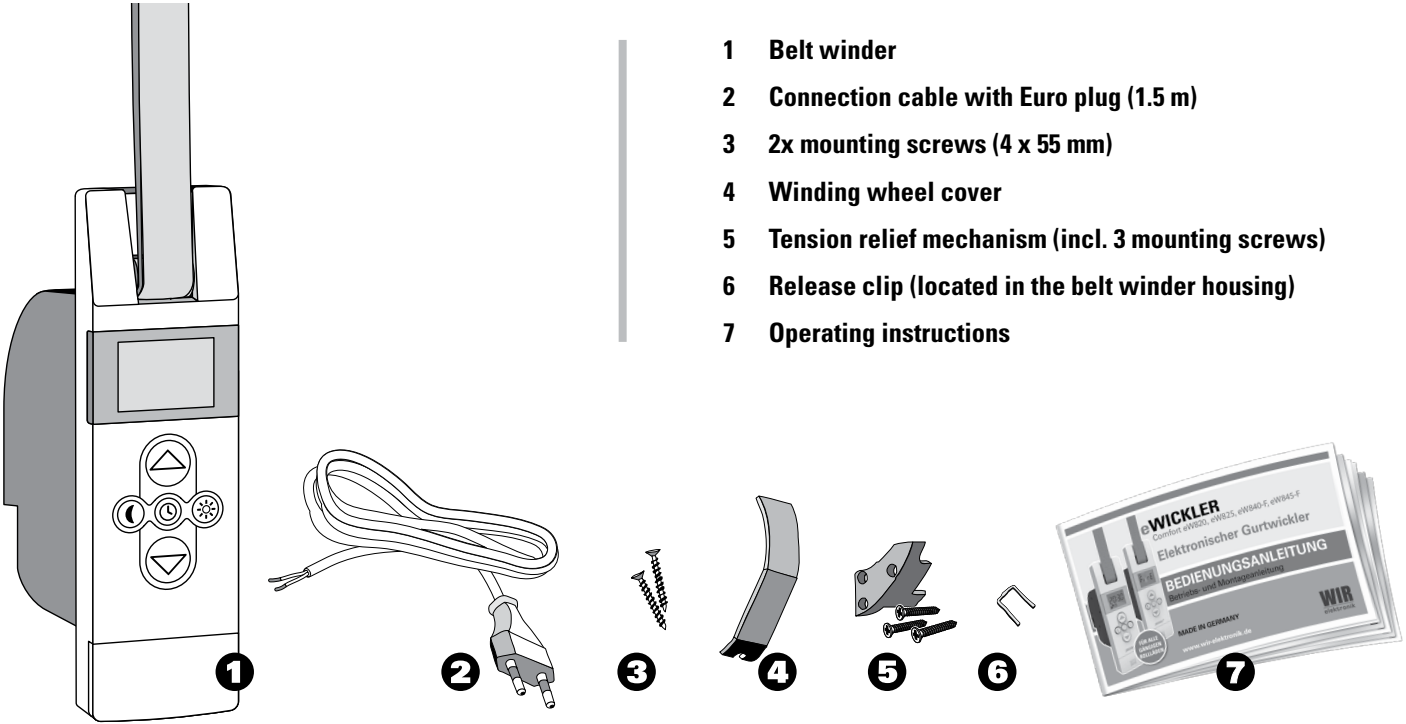

1 **Belt winder**

2 **Connection cable with Euro plug (1.5 m)**

3 **2x mounting screws (4 x 55 mm)**

4 **Winding wheel cover**

5 **Tension relief mechanism (incl. 3 mounting screws)**

6 **Release clip (located in the belt winder housing)**

7 **Operating instructions**

TABLE OF CONTENTS

WIR elektronik

Declaration 2

Welcome 3

Scope of delivery 4

Table of contents 5

Safety instructions 6 - 8

Applications 9

Brief description 10

Dimensions - Functions 11

Installation preparations 12 - 15
- Adjust the strap 12
- Electrical connection 13
- Insert and secure the strap 14
- Install the eWickler 15

Brief operating guide 16 - 19

Commissioning 18 - 20
- Time/date/summer/winter changeover/postcode 20 - 21
- End points 22

Manual operation 23

Log on/off from radio control units 24

Smoke alarm evaluation function test 25

Activate/change the automatic timer 26 - 31

ASTRO function / automatic mode 32 - 34

Automatic twilight function 35

Automatic sun function 36 - 37

Button lock 38

Display lighting 39

Reset 40

Factory settings - Maintenance 41

Device failure 42

Conformity - Technical data - Accessories 43

Accessories - Warranty conditions 44

What to do if... 45 - 46

Display messages 47

Consumer information / Notes 48 - 51

SAFETY INSTRUCTIONS

Attention: There is an increased risk of injury in the case of improper use!

These operating instructions contain important instructions for the installation and safe operation. Read these instructions before you start the installation. Follow all the enclosed instructions in order to ensure your safety.

Warning:

An incorrect installation can lead to serious injuries.
It is important to follow these operating instructions to ensure the safety of people! The operating instructions must be kept safe!

This device can be used by children from 8 years of age as well as people with reduced physical, sensory or mental abilities or a lack of experience and knowledge if they have been supervised or instructed in the safe use of the device and understand the resulting risks. Do not allow children to play with fixed controls. Keep remote controls out of reach of children. Cleaning and user maintenance may not be performed by children without supervision.

Note:

The eWickler has an overheat protection feature depending on the load. The eWickler must cool down for approx. 25 minutes after overheating (switch-off). Full operational readiness is achieved after approx. 3 hours. The maximum running time for the shutter (4 min.) may not be exceeded. This causes damage to the eWickler. In accordance with DIN EN 13659, 4.13.3.3, it is important to ensure compliance with the DIN EN 12045 standard during the installation, which regulates the sliding conditions for shutters. The DIN EN 13120 and DIN EN 13561 standards must also be observed.

Straps may only be used in the permissible lengths – see table (page 9). Longer straps damage the eWickler. All the stated guide values may vary due to the structural conditions on site. Radio systems using the same frequency can cause interference.

Attention:

Follow the instructions for installing and operating the system!
There is a considerable risk of injury if these are not observed!

- Proper operation of the system is only guaranteed with the correct installation, assembly, an adequate power supply and maintenance.
- Secure the system against unauthorised operation.
- Take safety precautions to prevent the system being switched on unintentionally.
- Before working on the system, disconnect all connection cables to be installed from the power supply and secure them against being switched on again unintentionally.
- Remove all unnecessary cables.
- Disable any equipment that is not required for the operation of the system.
- Install the operating element of a manual switch (control) below a height of 1.8 m.
- Take special care with moving and open systems, as parts may fall down if mountings (e.g. consoles, brackets, springs, etc.) become loose or broken.

Important:

Before the installation, compare the voltage / frequency information on the type plate with that of the local power supply, as well as the maximum size / weight / strap thickness and maximum strap length of the shutter and the strap with the corresponding information in the technical data on page 41.
Both the rated torque (up to 11/17.5 Nm for devices eW820, eW840-F / eW825, eW845-F) and the rated operating time (max. 4 min.) must be compatible with the characteristics of the powered system.

SAFETY INSTRUCTIONS

Attention:

Always follow the instructions for the correct use and operating conditions!
There is an increased risk of injury in the case of improper use!

Only use the eWickler to raise and lower roller shutters. Only use original components and accessories from the manufacturer. Instruct all people in the safe use of the control. Observe the moving system (roller shutter/slats) and keep people away from it until the movement has stopped.

Do not allow children to play with fixed controls or the remote control. Store hand-held transmitters in such a way to exclude unintentional operation, e.g. by playing children.

Carry out all maintenance and cleaning work on the system when it is disconnected from the power supply.
The system must be inspected regularly to check for a lack of balance or signs of wear or damaged cables and springs, if applicable.
Monitor the moving roller shutter when making adjustments and in normal operation and keep people away from the roller shutter until it is completely closed.

WIR elektronik is not liable for changes in regulations and standards after publication of the operating instructions!
Subject to technical changes!

Permissible roller shutter straps

Width (mm)	Thickness (mm)	Max. length (m)	
		eW820 / eW840-F	eW825 / eW845-F
17 (Mini)	1	6.3	-
23 Standard	1	6.3	17.6
23 Standard	1.3	4.8	13.4
23 Standard	1.5	4.2	11.8

Permissible roller shutter area

Roller shutter type	Weight / m²	Permissible roller shutter area (m²)	
		eW820 / eW840-F	eW825 / eW845-F
Plastic	3.5 kg	10	15
Aluminium	5 kg	8	12
Wood	10 kg	4	7

Intended use:

The eWickler may only be used to raise and lower roller shutters.
You should solely use original spare parts from WIR elektronik for repairs. This excludes damage to the eWickler and functional defects. WIR elektronik assumes no warranty or liability for the use of other spare parts.

Operating conditions:

Only use the eWickler in dry indoor areas. A 230V ~ 50 Hz power connection must be available at the installation site for the electrical connection, with an enabling device (fuse) provided by the customer. A 230 V~50 Hz power socket must be available for the connection cable. The eWickler must be installed on a flat surface. It is important to ensure the proper and smooth raising and lowering of the shutters at all times.

Note:
The installation and operation of the eWickler is only permitted for systems in which a malfunction poses no risk to people or property or in which the risk is covered by other safety devices.

Improper use:
The eWickler is solely permitted to be used for the stated applications in accordance with the operating instructions. Do not install the eWickler outdoors.

BRIEF DESCRIPTION

Description

The eWickler is a classic belt winder that is installed indoors as a flush-mounted device. The power can be connected using the enclosed cable or a permanently installed cable.

The **eW840-F / eW845-F:** provides an additional evaluation of acoustic signals from common smoke alarms to automatically raise roller shutters in the event of an alarm and can be individually operated on site and also in a WIR radio network.

If the eW840-F/eW845-F is integrated into a WIR radio network, you can use many functions of the respective WIR radio control units.

Start and stop:

To protect the mechanics, the eWickler has a gentle soft start and soft stop function.

Overrun protection / overload cut-out

If the roller shutter encounters an obstacle in lowering mode, the eWickler is switched off. Then it is no longer possible to operate the shutter in the same direction.

First move the roller shutter in the opposite direction and remove the obstacle.

It is then possible to operate the shutter in the original direction. If the roller shutter is overloaded in raising mode, it also switches off. After eliminating the cause and operating the shutter in the opposite direction, it is possible to operate the shutter in both directions again.

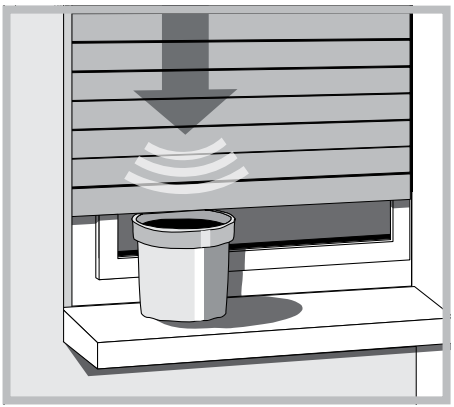

Functions

- Adjustable switching times for raising and lowering
- Automatic summer - winter time changeover
- Large LC display provides information about active functions
- Individual sun and twilight control possible with one sensor
- Smoke alarm evaluation, the eWickler-F opens the roller shutter immediately when an alarm is triggered (eW840-F, eW845-F)
- Radio controllable (eW840-F, eW845-F)
- Gentle soft start and soft stop of the motor
- Button lock, protection against unauthorised operation
- Overrun protection / overload cut-out
- ASTRO function

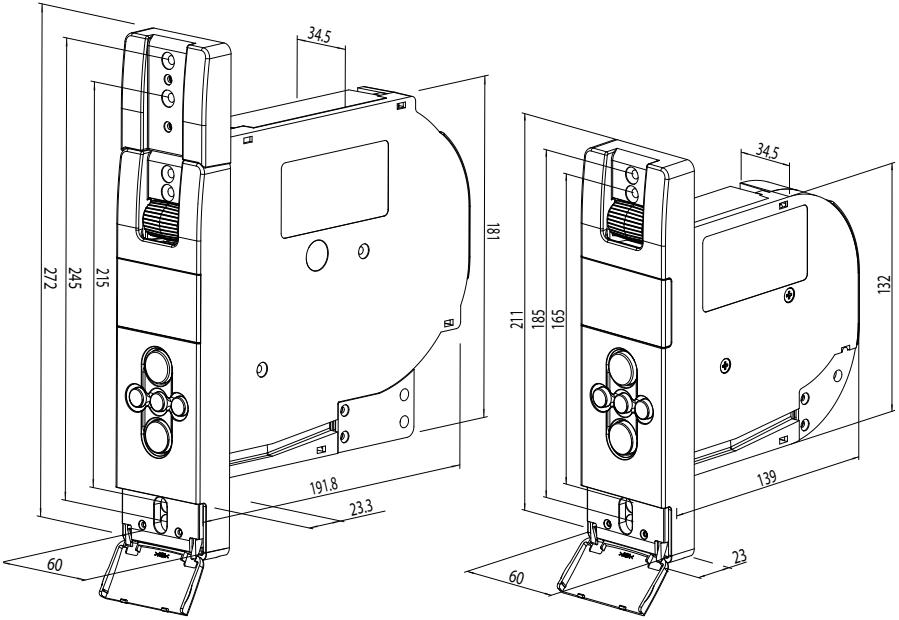

WIR elektronik is not liable for changes in regulations and standards after publication of the operating instructions! Subject to technical changes!

INSTALLATION PREPARATIONS

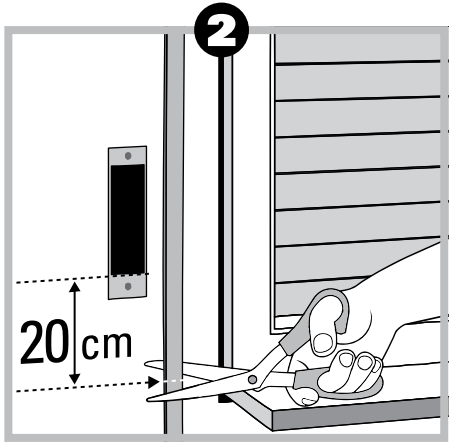

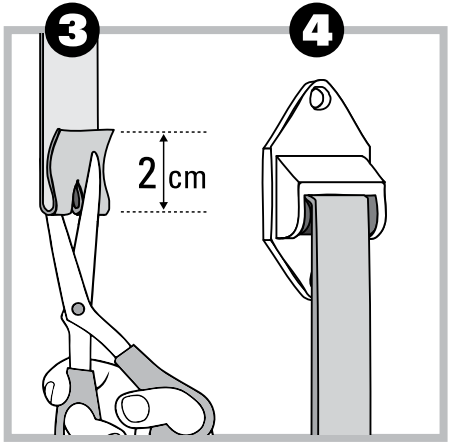

❶ Remove the old belt winder:
Lower the roller shutter completely, remove the belt winder and unwind the strap.

Handle the spring box with care. There is a considerable risk of injury as a result of the tensioned spring.

❷ Cut the strap approx. 20 cm below the belt box.

❸ Double the strap at the end (approx. 2-3 cm) and cut a slit with scissors for subsequent installation on the winding wheel.
❹ If necessary, fit an idler pulley to the roller shutter box - this prevents unnecessary wear.

Safety instructions for the electrical connection/warnings

When installing electrical devices, there is always a danger to life. Electrical systems may only be installed by a qualified electrician (a specialised electrical company).

If the mains connection cable of this device is damaged, it must be replaced with a special connection cable available from the manufacturer.

All other installation work may only be carried out when the system is disconnected from the power supply.
It is important to disconnect all supply lines from the power supply and to secure them against unintentional reconnection.

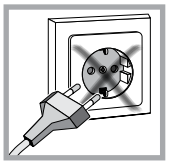

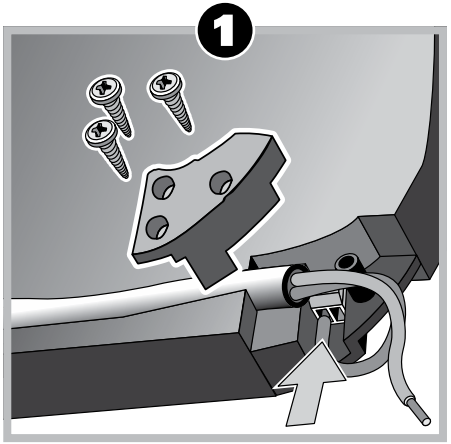

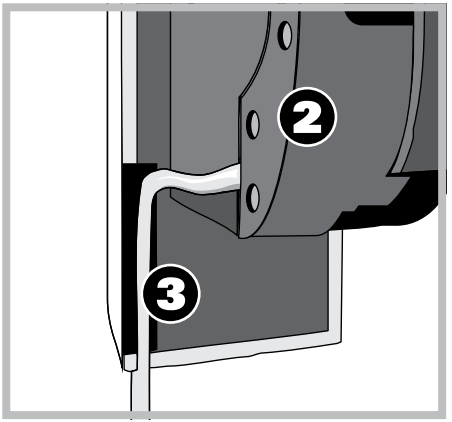

Electrical connection

❶ Connect the enclosed cable (alternatively: Connect the system using a permanently installed cable). Ensure that the cable is routed firmly and securely and is not damaged (risk of short circuit).

❷ Use the enclosed tension relief mechanism.

❸ Route the connection cable in the cable duct of the eWickler.

INSTALLATION PREPARATIONS

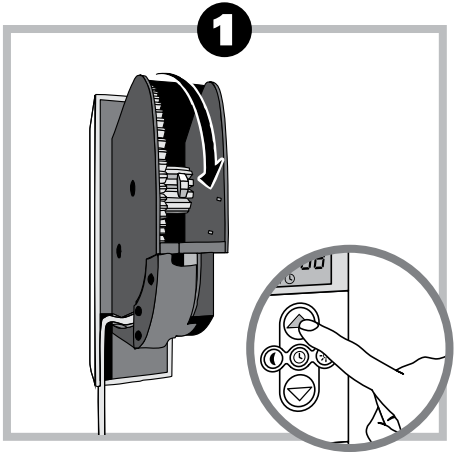

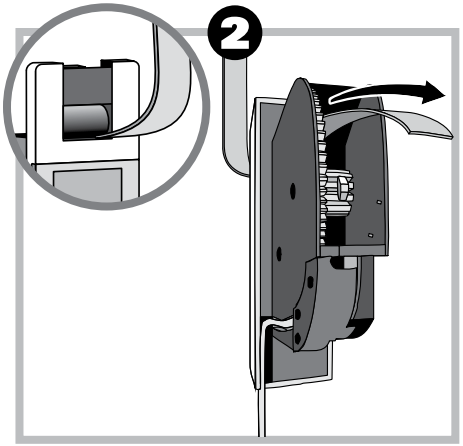

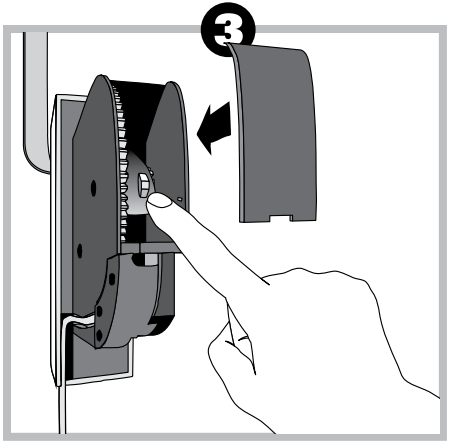

Insert and secure the strap

Connect the plug to the power supply.
❶ Press the [Up] button until the mounting hook in the winding wheel compartment can be reached.
Caution: Do not reach into the winding compartment while the motor is running.

Now pull the plug out of the socket

❷ Insert the strap into the eWickler from the front.

❸ Place it over the mounting hook from above and hook it in.

Insert the plug back into the socket

Press the [Up] button until the strap has wound itself completely around the winding wheel.
Fit the winding wheel cover onto the winding wheel housing.

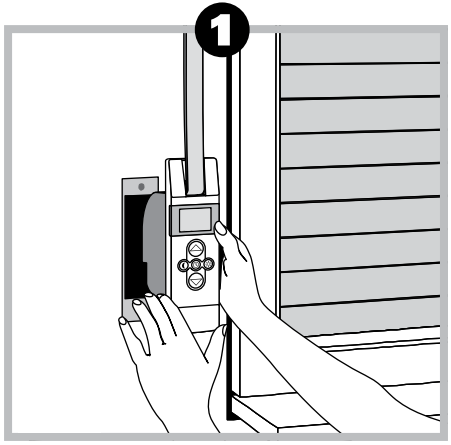

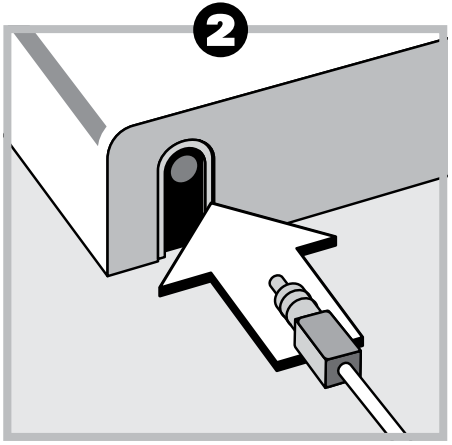

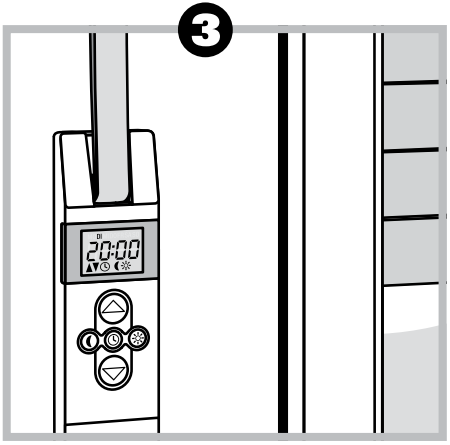

Install the eWickler

❶ Fix the eWickler in the belt box with mounting screws - Ensure a straight installation and distance to the brickwork. Route the connection cable neatly in the cable duct. This will prevent damage.

❷ Install the optional light sensor (not included in the scope of delivery).
To do this, simply insert the sensor plug into the connection socket (underside of the eWickler).

❸ Attach the sensor to the window pane using a suction cup. The position determines how far the roller shutter lowers when the sun is shining.

Warning: Follow all the installation instructions, as an incorrect installation can lead to serious injuries.

BRIEF OPERATING GUIDE

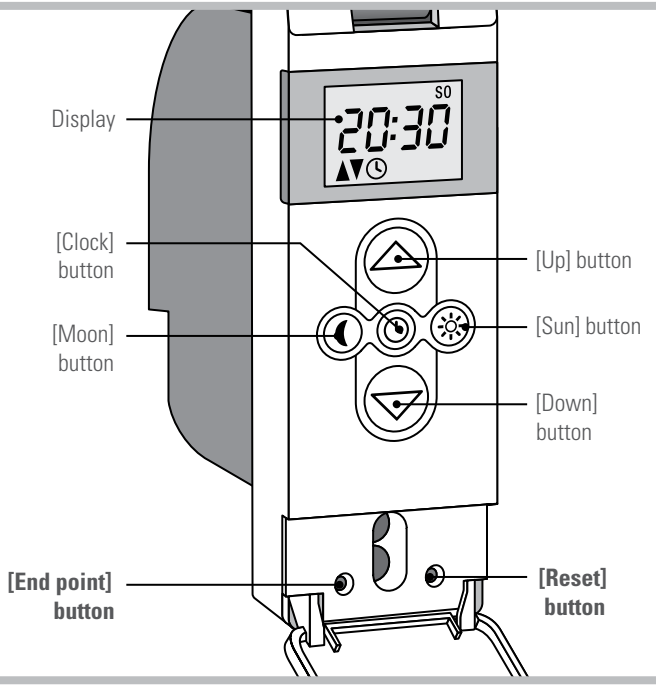

Basic settings: Time / date / summer / winter time changeover / postcode

Press the [Clock] button for 2 seconds: Set the clock (hours, minutes), date (day/month/year), summer/winter time changeover and postcode.

[Up] button: Increase the value

[Down] button: Reduce the value

[Clock] button: Confirm each set value (hr/min/day/month/year/ summer/winter/postcode).

Basic settings: Set the end points

Without end point adjustment, the eWickler only runs as long as one of the two operating buttons is pressed.

Set the upper end point

Press and hold the [Up] button and [End point] button. The roller shutter moves up to the desired upper end point **Release one of the buttons**. The upper end point is set.

Set the lower end point

Repeat the points described above with the [End point] button + [Down] button

WIR elektronik

Set/change the raising switching times:

• Week program

Press the [Clock] and [Up] buttons simultaneously. The time (hr/min), up symbol and all days of the week appear on the display.

[Up] button: Increase the value

[Down] button: Reduce the value

[Clock] button: Confirm each set value (hr/min)

- Weekend program

Press the [Clock] and [Up] buttons simultaneously

Press the [Clock] button for 2 seconds, the display view changes to the weekend program

- First set Mon-Fri
- Then set Sat-Sun as described above

Set/change the lowering switching time:

Press the [Clock] and [Down] buttons simultaneously. Time (hr/min), lowering symbol and all days of the week appear on the display

Proceed as described above (raising).

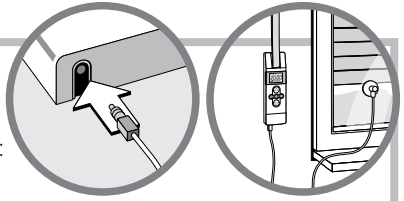

Set the sensor

Automatic twilight function:

Press the [Moon] button for 2 seconds: activates / deactivates the twilight function

Set the automatic twilight function limit value:

Press the [Moon] button and [Clock] button briefly at the same time. The currently measured value is saved and confirmed by the moon symbol flashing briefly on the display.

Automatic sun function:

Press the [Sun] button for 2 seconds: activates / deactivates the sun function

Set the automatic sun function limit value:

Press the [Sun] button and [Clock] button briefly at the same time. The currently measured value is saved and confirmed by the sun symbol flashing briefly on the display.

The functions described above can only be activated with the accessories eSO371 or eSO400 / eSO410 (eW840-F / eW845-F)!

Log on to radio control units (only eW840-F/eW845-F)

Press the [Moon] and [Up] buttons

The "On" symbol appears on the LCD display. Switch the radio control unit to log-on mode (see the respective device operating instructions).

The "On" symbol disappears, the motor starts up briefly for acknowledgement - the devices are connected. This is symbolised by radio waves at the bottom right of the display.

Log off from radio control units (eW840-F/eW845-F)

Press the [Moon] and [Down] buttons

The "Down" symbol appears on the LCD display. Switch the radio control unit to log-off mode (see the respective device operating instructions).

The "Off" symbol disappears, the motor starts up briefly for acknowledgement - the devices are disconnected. The radio waves disappear from the bottom right of the display - provided no other devices are logged on.

Error logging on and off from radio control units (eW840-F/eW845-F)

If the "Err" symbol appears on the LCD display during the log-on or log-off process, the log-on or log-off did not work.

Repeat the respective process as described above.

Button lock

+ Pressing the [Moon] and [Sun] buttons for at least 4 seconds activates the button lock. Loc" appears on the LCD display for 2 seconds.
The operating buttons are now locked.

Repeat the process described above to deactivate the button lock. "ULoc" appears on the LCD display for 2 seconds.
The operating buttons are released again.

Smoke alarm function test (eW840-F/eW845-F)

▽ **Press the [Down] button**

Roller shutter moves to the lower end position

Press the test button on the smoke alarm, thus triggering the alarm.

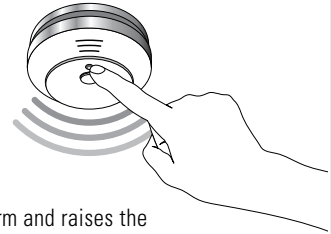

The eWickler-F detects the test alarm and raises the roller shutter. The "FirE" symbol flashes on the LCD display every second for one hour.

Press any function button to exit the device's alarm mode.

Note:
You can deactivate the fire function. To do this, press and hold the [Moon] and [Sun] buttons and press the [Down] button twice. The display shows "FirE" and "OfF" in succession.

COMMISSIONING

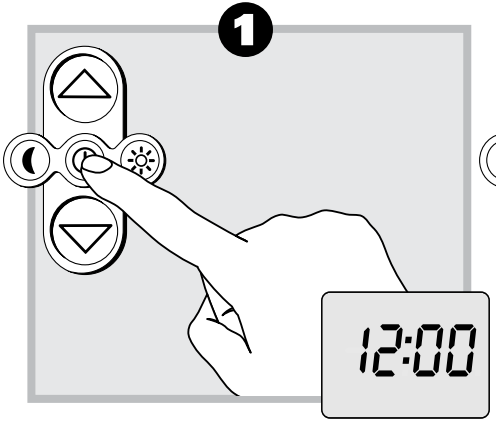

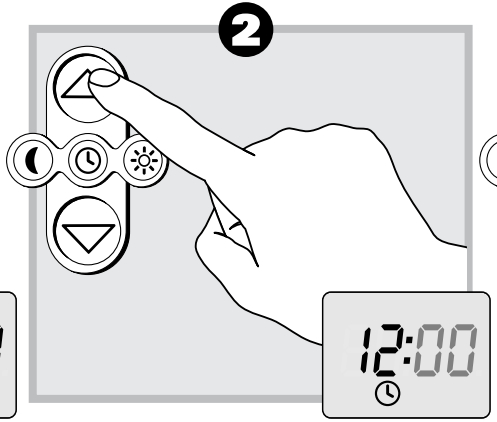

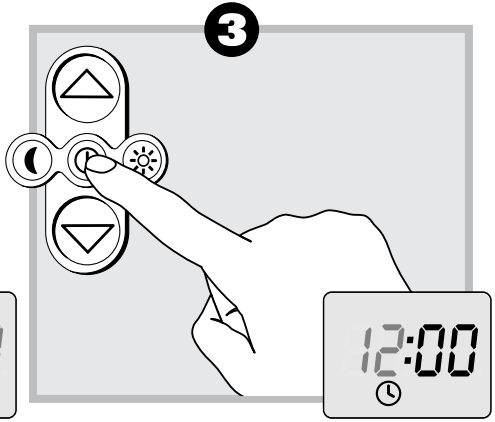

An installation wizard automatically guides you through the initial basic settings during the initial commissioning or after a software reset.

Set the time and date
After inserting the plug for the first time, the display flashes and the clock display appears.

❶ To set the clock, press the [Clock] button for approx. **two seconds**, the hour display starts to flash.

❷ Now simply set the hours using the [Up] and [Down] buttons.
Confirm the entry by pressing the [Clock] button.

❸ The minutes will now flash and, like the hours, can be adjusted forwards and backwards using the [Up] and [Down] buttons. Hours and minutes are set separately.

After confirming the minutes with the [Clock] button, the internal seconds are set to 0 and the clock starts.

Date
The current date must be set so that the eWickler automatically changes the summer/winter time.

❻ Finally, enter the first two digits of your postcode to use the ASTRO function. Use the [Up] and [Down] buttons to adjust the values and the [Clock] button to confirm each setting. The setting is complete.

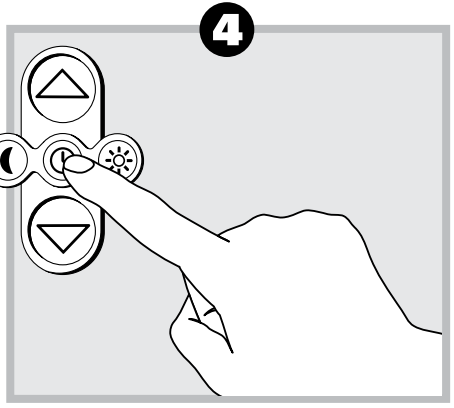

❹ First set the day by pressing the [Clock] button again and then set the month and year by confirming each time with the [Clock] button.

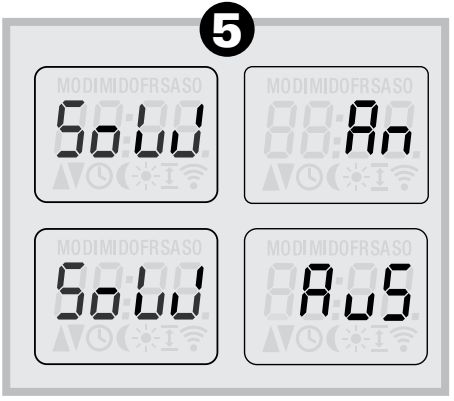

❺ Next, set whether the summer/winter time changeover should take place automatically. Use the [Up] and [Down] buttons to set the automatic changeover to "On" or "Off". Confirm the setting with the [Clock] button.

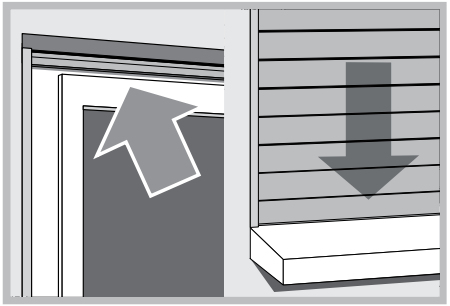

Set the end points

Important information regarding setting the end points: The end points must be configured in order for the roller shutters to stop at the desired top and buttom positions. It is imperative that both end points are configured, otherwise malfunctions may occur.

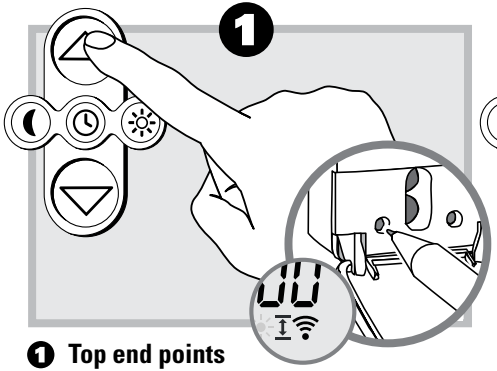

❶ Top end points

Hold down the [End point] button and press the [Up] button until you have reached the end point. As soon as you release one of the buttons, the motor stops and the end point is set.

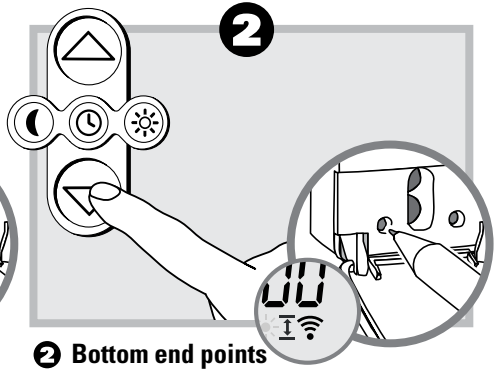

❷ Bottom end points

Use the [Down] button and [End point] button to set the lower end point in the same way. Make sure that the belt does not sag in the lower end position.

Please do not set the end position at the outermost stop.

Note:

Depending on the load and running time, the eWicklers have an overheat protection feature. If this overheat protection feature is activated, "hot" appears on the display and the eWickler cannot be operated for approx. 25 minutes. Full operational readiness is achieved after approx. 3 hours. The response of the overheat protection feature may occur when setting the end positions and then performing a test run. This is a safety function and does not constitute a defect in the device.

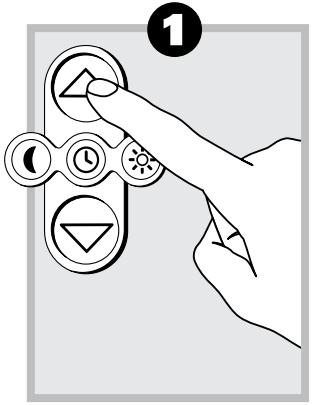

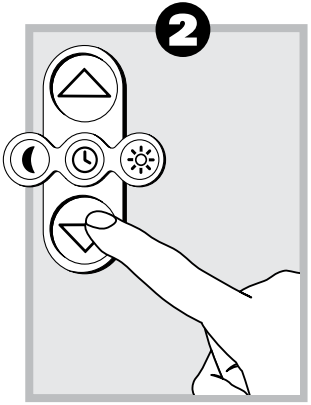

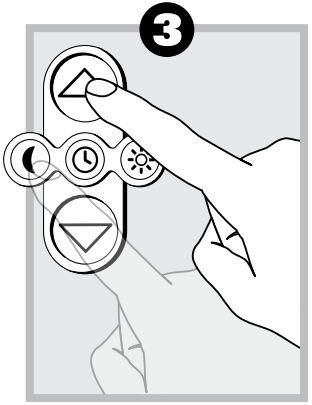

❶ Raise the roller shutter
Briefly press the [Up] button and the eWickler will raise the roller shutter to the upper end position.

❷ Lower the roller shutter
Briefly press the [Down] button and the eWickler will lower the roller shutter to the lower end position.

❸ Stop
You can stop the process by pressing any button.

The system can be operated manually at any time without any damage.

LOG ON/OFF FROM RADIO CONTROL UNITS

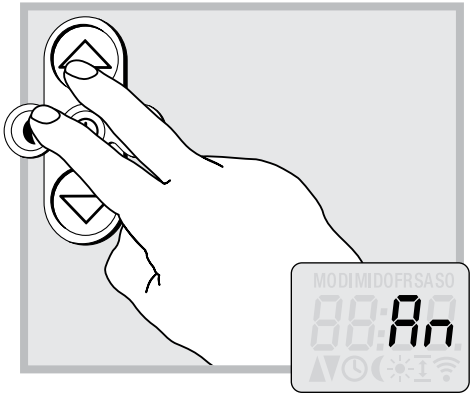

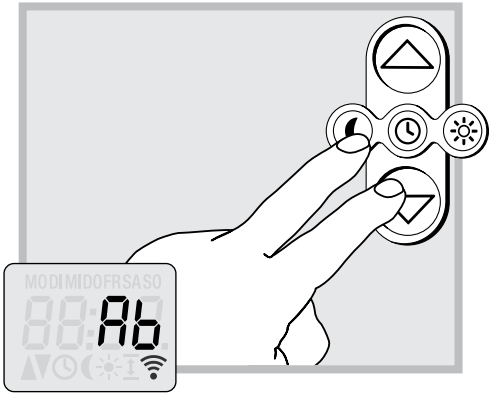

Log on to radio control units:
Press the [Moon] and [Up] buttons.
The "On" symbol appears on the LCD display. Switch the desired transmitter, sensor or controller to log-on mode (see the relevant device operating instructions).

The "On" symbol disappears, the motor starts up briefly for acknowledgement - the devices are connected to each other. This is symbolised by radio waves at the bottom right of the display.

Log off from radio control units:
Press the [Moon] and [Down] buttons.
The "Off" symbol appears on the LCD display. Switch the desired transmitter, sensor or controller to log-off mode (see the respective device operating instructions).

The "Off" symbol disappears, the motor starts up briefly for acknowledgement - the devices are disconnected. The radio waves disappear from the bottom right of the display - provided no other devices are logged on.

SMOKE ALARM EVALUATION FUNCTION TEST

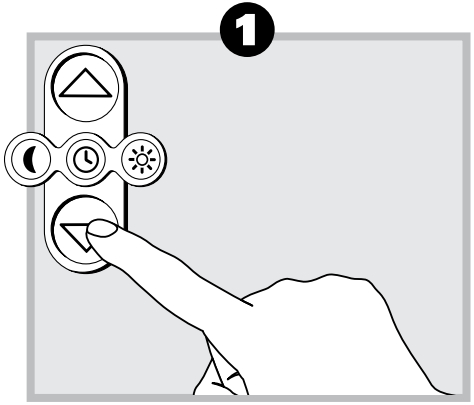

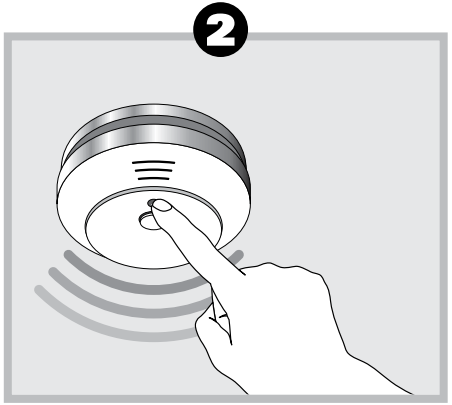

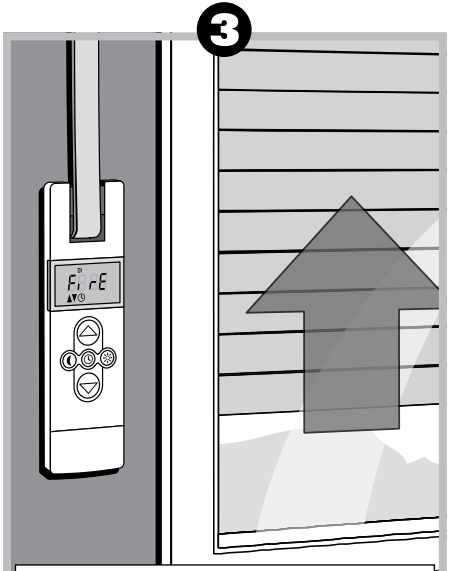

In principle, the additional smoke alarm evaluation function is ready for operation on the eW840-F/ eW845-F devices without any further setting/ programming. To be on the safe side, you should carry out a function check as described below:

1. Briefly press the [Down] button and the eWickler will lower the roller shutter to the lower end position

2. Trigger the test alarm on your installed smoke alarm.

3. The eW840-F/eW845-F detects the alarm and moves the roller shutter to the upper end position. "FirE" appears on the display for one hour. Press a function button to exit alarm mode.

Note:
You can deactivate the fire function. To do this, press and hold the [Moon] and [Sun] buttons and press the [Down] button twice. The display shows "FirE" and "OfF" in succession.

ACTIVATE/CHANGE THE AUTOMATIC TIMER

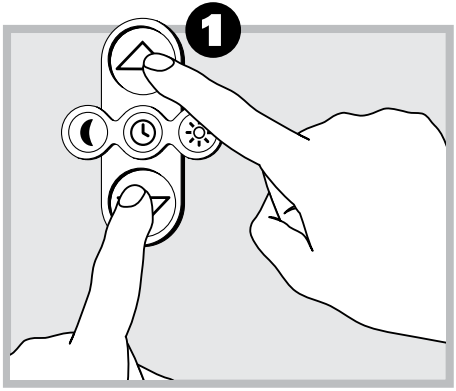

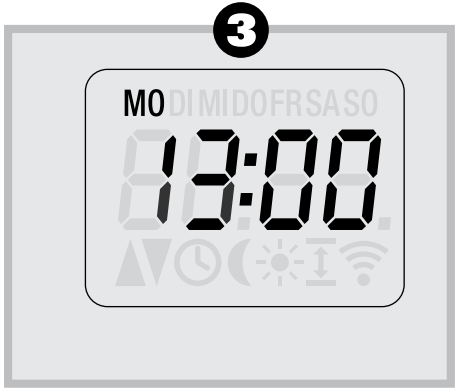

Activate/change the automatic timer:
To change the status of the automatic timer, the date and time must already be set (see page 20 - 21).

❶ Activate/deactivate the automatic timer:
Press the [Up] and [Down] buttons simultaneously to activate or deactivate the automatic timer.

❷ Active automatic timer:
The UP and DOWN arrows and the CLOCK symbol are shown on the display.

❸ Deactivated automatic timer:
The UP and DOWN arrows and the CLOCK symbol disappear from the display.

Automatic timer
You can set the switching times of the eWickler to suit your individual requirements:

- **Week** program - Monday to Sunday with identical switching times

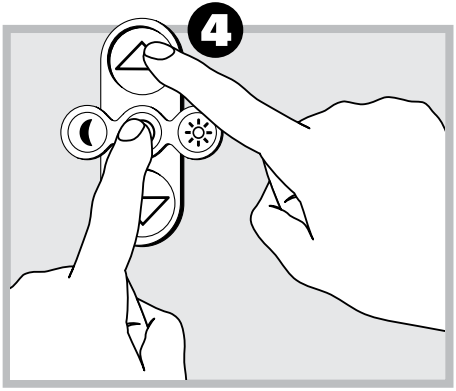

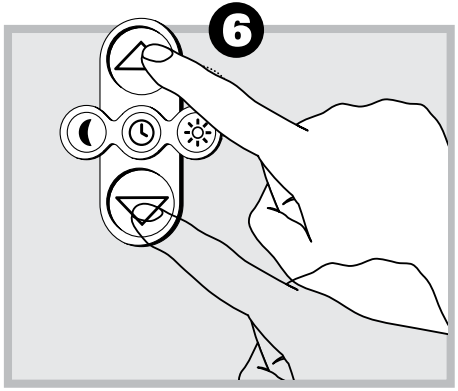

- **Weekend** program - Saturday and Sunday with different switching times

The week program is preset at the factory!

Change the automatic timer times:
To change the raising and lowering times of the automatic timer, the date and time must already be set (see page 20 - 21).

4 5 Change the raising time on the week program:
Press the [Clock] and [Up] buttons simultaneously. The set raising time (factory setting 08:00) and the UP arrow symbol and all days of the week are shown on the display.

6 Press the [Up] or [Down] buttons to set the hour first.

7 Press the [Clock] button to accept and save the set hour.
Then repeat the process to set the minutes and save the set minutes by pressing the [Clock] button.

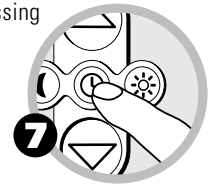

ACTIVATE/CHANGE THE AUTOMATIC TIMER

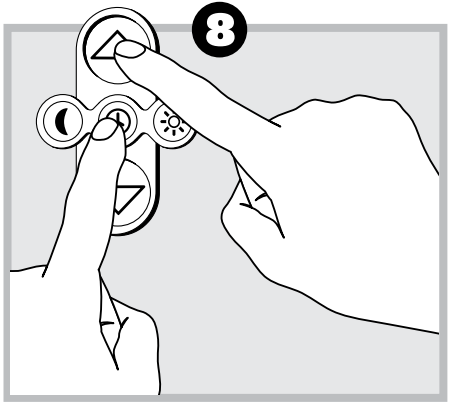

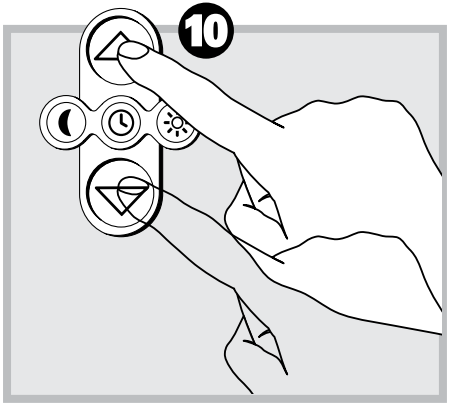

8 Change the raising time and mode - weekend program:
Press the [Clock] and [Up] buttons simultaneously. The set raising time, all days of the week and the UP arrow symbol are shown on the display (see page 26).

9 Pressing the [Clock] button for 2 seconds switches the display to weekend mode.

10 The weekdays Mon to Fri are shown on the display first. Press the [Up] or [Down] buttons to change the hours first.

Note: Between 23:00 hours and 00:00 hours, the display shows "Off" - this selection deactivates the raising time.

Press the [Clock] button to accept and save the setting. Then repeat the process to set the minutes.

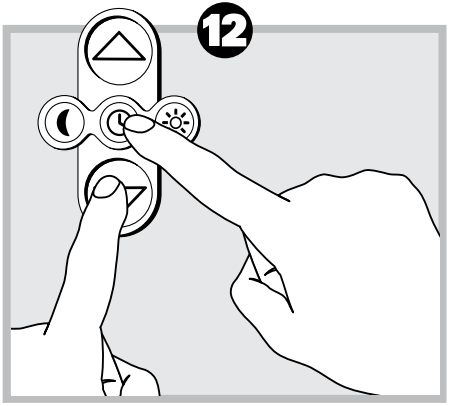

Press the [Clock] buttons to complete the process and the display changes to the weekend days Sat and Sun.

11 You can now set the raising times for the weekend as described above. First the hours - then the minutes or also to "OFF". Confirm and save all changes made with the [Clock] button.

The setting / change is then completed and the menu is exited.

12 13 Set the lowering time on the week program:
Press the [Clock] and [Down] buttons simultaneously. The set lowering time (factory setting 20:00 hours), the DOWN arrow symbol and all weekdays are shown on the display.

Press the [Up] or [Down] buttons to set the hour first.
Press the [Clock] button to accept and save the set hour. Then repeat the process to set the minutes and save the set minutes by pressing the [Clock] button.

ACTIVATE/CHANGE THE AUTOMATIC TIMER

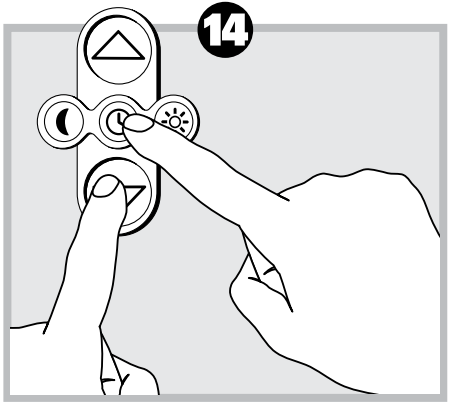

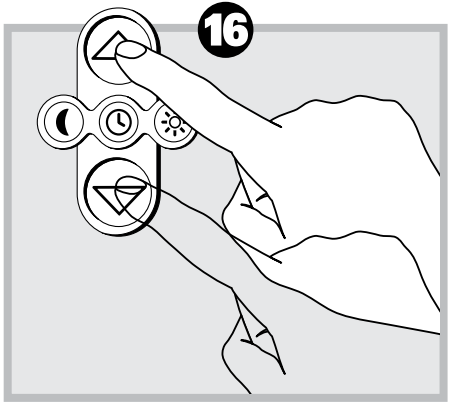

14 Change the lowering time and mode - weekend program:
Press the [Clock] and [Down] buttons simultaneously. The set lowering time, all days of the week and the DOWN arrow symbol are shown on the display.

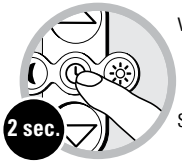

15 Pressing the [Clock] button for 2 seconds switches the display to weekend mode.

16 The weekdays Mon to Fri are shown on the display first.

Press the [Up] or [Down] buttons to change the hours first.

Note: Between 23:00 hours and 00:00 hours, the display shows "Off" - this selection deactivates the lowering time.

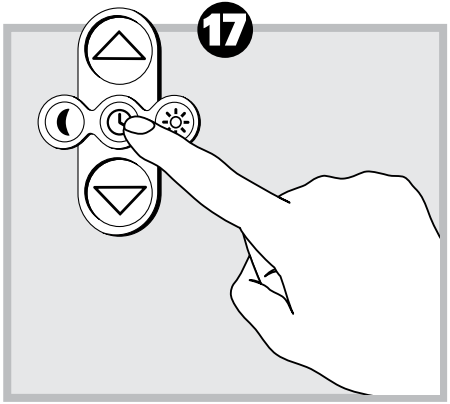

Press the [Clock] button to accept and save the setting. Then repeat the process to set the minutes.

17 Pressing the [Clock] button completes the process and the display switches to the weekend days Sat and Sun.

18 You can now set the lowering times for the weekend as described above.
First the hours - then the minutes or also to "OFF". Confirm and save all changes made with the [Clock] button. The setting / change is then completed and the menu is exited.

ASTRO FUNCTION

You can use the ASTRO function for both the raising and lowering times. The eWickler calculates the sunrise and sunset times based on the first two digits of your postcode entered during commissioning. You can change these astro times by a maximum of 2 hours before or after the astro time (in 10-minute increments).

You can also set so-called locking periods for mornings and evenings with the ASTRO function.

The locking period for the **morning**means that the eWickler will never raise the roller shutter before the set locking period.
Example: Locking period in the morning 06:30 hours, astro time 05:37 hours, the roller shutter raises at 06:30 hours, or locking period in the morning 06:30 hours, astro time 07:58 hours, the roller shutter raises at 07:58 hours.

The locking period for the **evening**means that the eWickler will never lower the roller shutter after the set locking period.
Example: Locking period in the evening 20:00 hours, astro time 17:25 hours, the roller shutter lowers at 17:25 hours, or locking period in the evening 20:00 hours, astro time 21:30 hours, the roller shutter lowers at 20:00 hours.

This function is available in the week and weekend programs.

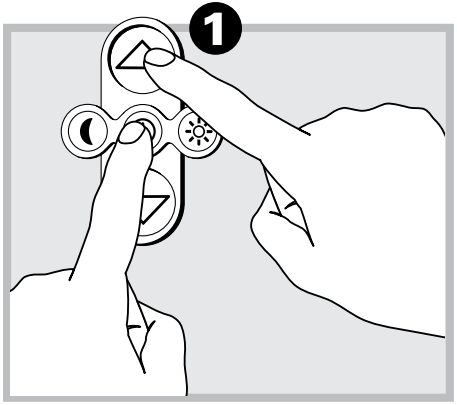

Activate / set the ASTRO function
❶ Pressing the [Clock] and [Up] buttons simultaneously to raise the shutter or the [Clock] and [Down] buttons at the same time to lower the shutter takes you to the automatic switching time settings.

❷ The raising or lowering time and the arrow up or arrow down symbol are shown on the display.

❸ Now press the [Up] or [Down] buttons repeatedly until you reach the "AStr" display. **Now confirm the ASTRO function with the [Clock] button.**

❹ On the following display, you can adjust the astro time in 10-minute increments using the [Up] or [Down] buttons. The maximum possible times are + 2:00 hours and - 2:00 hours. If the eWickler is to run before the astro time, then go into the negative ("-" before the displayed time). If the eWickler is to run after the astro time, then you go into the positive (nothing is displayed before the time).

Press the [Clock] button to confirm the set time. You will then be taken to the locking period setting. This is initially set to "OFF".

❺ Use the [Up] or [Down] buttons to set your desired locking period and confirm it with the [Clock] button, first the hours and then the minutes. The setting is then complete and the menu is exited.

AUTOMATIC OPERATION

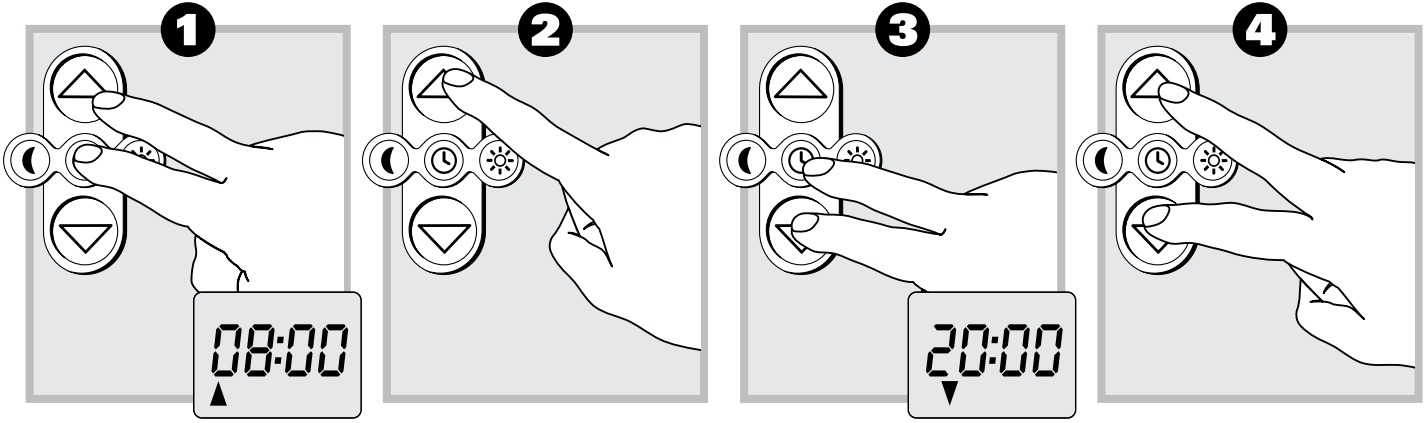

Automatic timer
With the automatic timer, you can raise and lower the roller shutter automatically at the switching times you set.

❶ **Up switching time:**
Press the [Clock] and [Up] buttons simultaneously. The preset switching time for raising the shutter and the raising symbol are displayed.

❷ Using the [Up] and [Down] buttons, you can set the desired time by pressing the [Clock] button, first the hours and then the minutes. After 23:00 hours "OFF" appears to deactivate the function for this running direction => semi-automatic mode.

❸ **Down switching time:**
Press the [Clock] and [Down] buttons simultaneously. Then proceed as described above.

❹ **Deactivate or activate switching times:**
Briefly press the [Up] and [Down] buttons simultaneously. The switching times are now deactivated. To activate them, repeat the process.

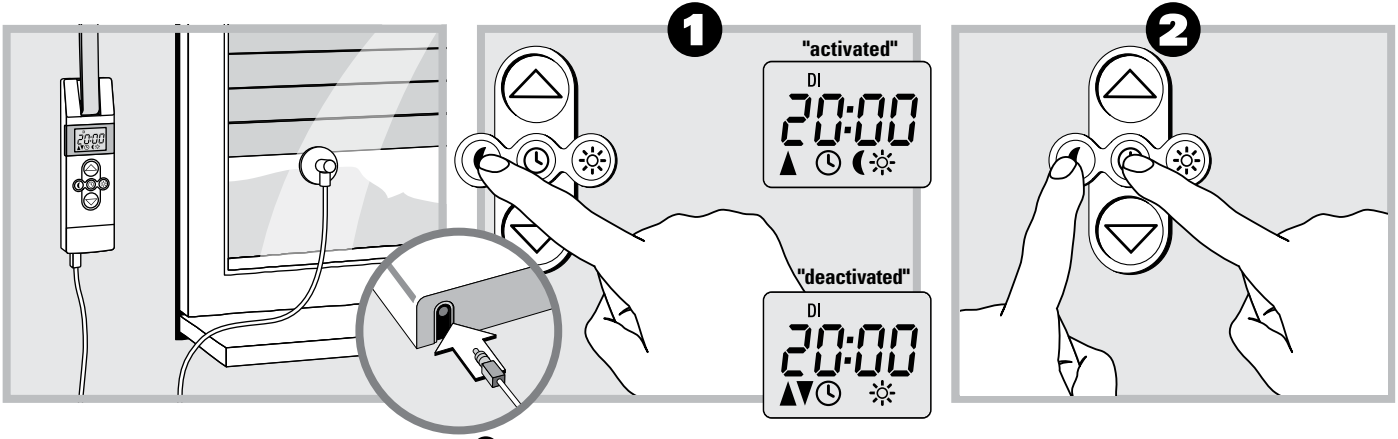

Automatic twilight function
At dusk, the automatic function automatically closes the roller shutter to the lower end point (only works with the light sensor connected/logged on).
The roller shutter opens again at the set opening time or after a manual open command.

❶ You can deactivate this automatic function by pressing the [Moon] button **(2 sec)** - The moon symbol disappears from the display. Repeating this activates this automatic function.

❷ **Set the automatic twilight function limit value:**
Briefly press the [Moon] and [Clock] buttons simultaneously. The currently measured value is saved and confirmed by the moon symbol flashing briefly.
If you use the automatic twilight function, automatic lowering is (permanently) deactivated by the automatic timer.

You can switch automatic lowering back on manually (see page 29, points 12-13).

AUTOMATIC SUN FUNCTION

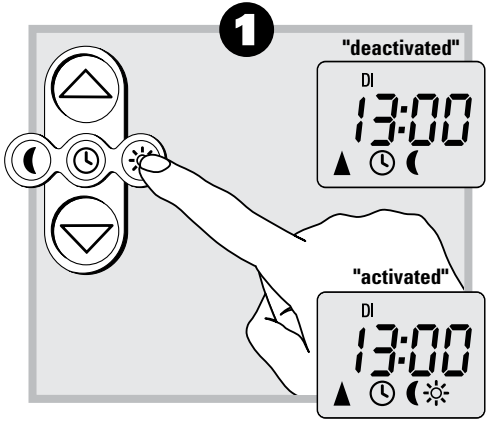

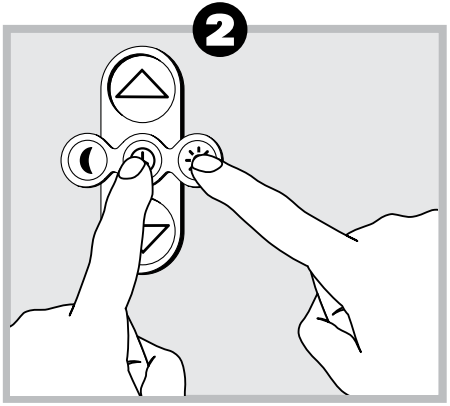

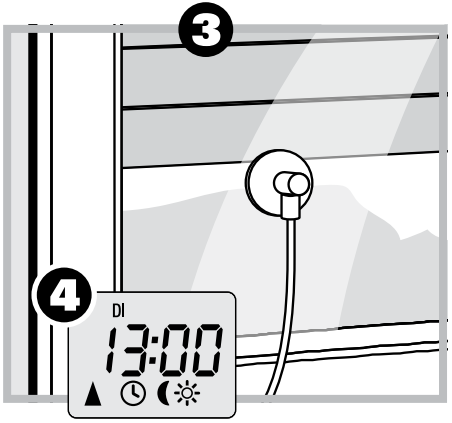

Switch the automatic sun function on and off:

❶ Activate or deactivate the automatic sun function by pressing the [Sun] button until the sun symbol goes out or appears.

If the light sensor is not plugged in/connected, the function is always deactivated.

Set the automatic sun function limit value:

❷ Briefly press the [Sun] and [Clock] buttons simultaneously. Saving the limit value is confirmed by the sun symbol flashing briefly.

Automatic sun function:

Automatic lowering and raising once a set limit value is exceeded.

Installation example

❸ The sun position of the roller shutter can be freely selected by the position of the light sensor on the window pane.

❹ Observe the sun symbol on the display. When the automatic sun function is active, the sun symbol flashes as soon as the measured brightness exceeds the set limit value.

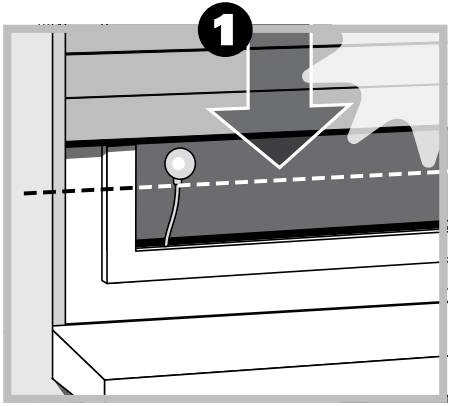

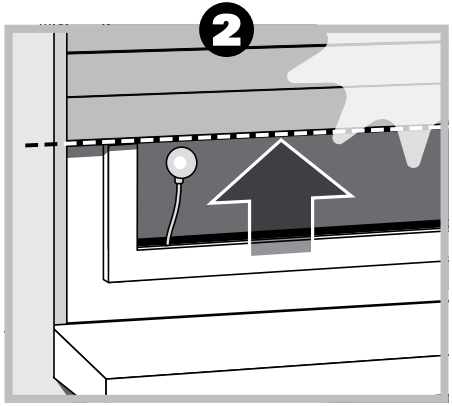

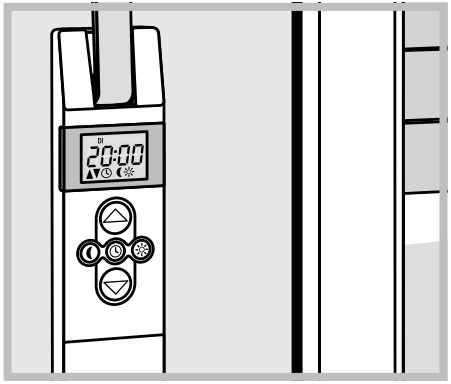

Automatic lowering:

❶ If the light sensor detects uninterrupted sunlight for 10 minutes, the roller shutter lowers until its shadow covers the light sensor.

Automatic release:

❷ After approx. 20 minutes, the roller shutter automatically raises a little to release the sensor. If the sun continues to shine, the roller shutter remains in this position. If the brightness falls below the set limit value, it moves back to the upper end point.

Note:

In changing weather conditions, the above-mentioned delay times may be exceeded.

The automatic sun function is ended after the following events and restarted if necessary:

- After manual actuation.
- After executing an automatic function.
- After reaching the upper end point.

BUTTON LOCK

Activate the button lock

Press the [Moon] and [Sun] buttons simultaneously for at least 4 seconds. The button lock is activated. “Loc” appears on the LCD display for 2 seconds. The operating buttons are now locked.

If you now press one of the function/operating buttons, the selected function will not be executed by the device. “Loc" appears briefly on the display to indicate that the button lock is active.

Deactivate the button lock

To deactivate the button lock, repeat the process described above.
“ULoc" appears on the LCD display for 2 seconds.
The operating buttons are released again.

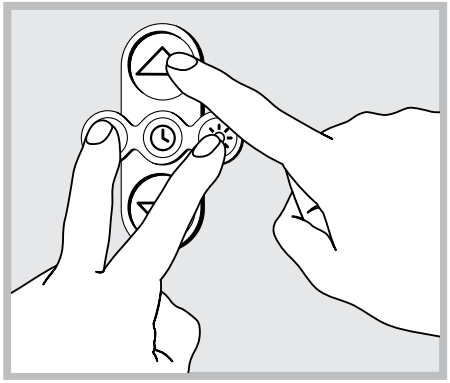

Display lighting
A display backlight can be switched on to make the display on the eWickler easier to read.

Dimming mode is switched on in the delivered state.

The lighting of the eWickler switches on for 15 seconds when it is operated. If the eWickler is no longer operated, the lighting slowly dims and switches off again within five seconds.

By pressing the [Sun] + [Moon] buttons simultaneously and then pressing the [Up] button, you can choose between 3 modes:

- Lighting continuously off
- Lighting continuously on
- Lighting in dimming mode

RESET

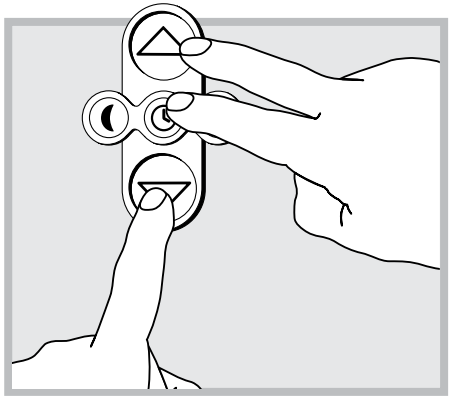

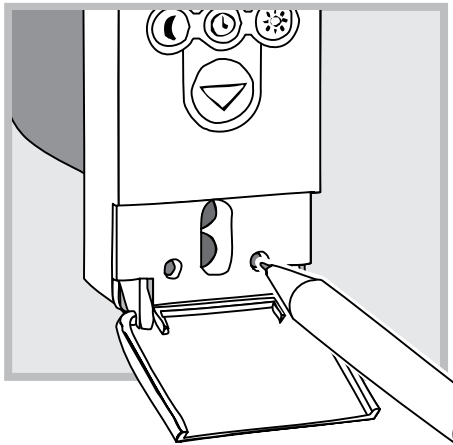

Restore the factory settings:

Software reset:
Press the [Up], [Down] and [Clock] buttons simultaneously until all segments are shown on the display.

All logged on radio devices are deleted.

The eWickler is now back in its delivery state.

Hardware reset (restart):
Briefly pressing the [Reset] button restarts the device (end points, threshold values and switching times are retained).

Factory settings	**Comfort**
Automatic function:	On
Switching times:	On, activated in the week program
Up time:	08:00 hours
Down time:	20:00 hours
Time / Date:	12:00 hours / 01.01.2022
POSTCODE:	99
ASTRO function:	Off, no locking period
Display lighting:	On, in dimming mode
Fire function:	Activated (only eW840-F/eW845-F)
Button lock:	Deactivated
Summer/winter time changeover:	On
Automatic sun function:	installed, activation by connecting a sensor eSO371 or eSO400/eSO410 (only eW840-F/eW845-F)
Automatic twilight function:	installed, activation by connecting a sensor eSO371 or eSO400/eSO410 (only eW840-F/eW845-F)

Maintenance

Regularly check your eWickler and all components of your roller shutter system for damage:

- The idler pulley on the roller shutter box must move smoothly
- The strap must not be frayed or otherwise damaged at the edges
- Arrange for damaged components to be replaced immediately by your roller shutter specialist.

Care

Clean your eWickler with a damp cloth. Never use aggressive or abrasive cleaning agents.

Device failure - remove the strap
If the eWickler should ever fail and the motor no longer runs, you can use the gear release to completely remove the strap from the device without having to destroy it.

To do this, proceed as follows:

- Pull out the plug
- Remove the eWickler.
- You can now release the gear using the enclosed release clip

Attention: Hold the strap firmly, otherwise the roller shutter may fall down unchecked.

A small resistance must be overcome when pressing the release clip.
To do this, press and hold the release clip and pull the strap out of the eWickler as far as possible.

Then detach the strap from the mounting hook and pull it completely out of the eWickler.

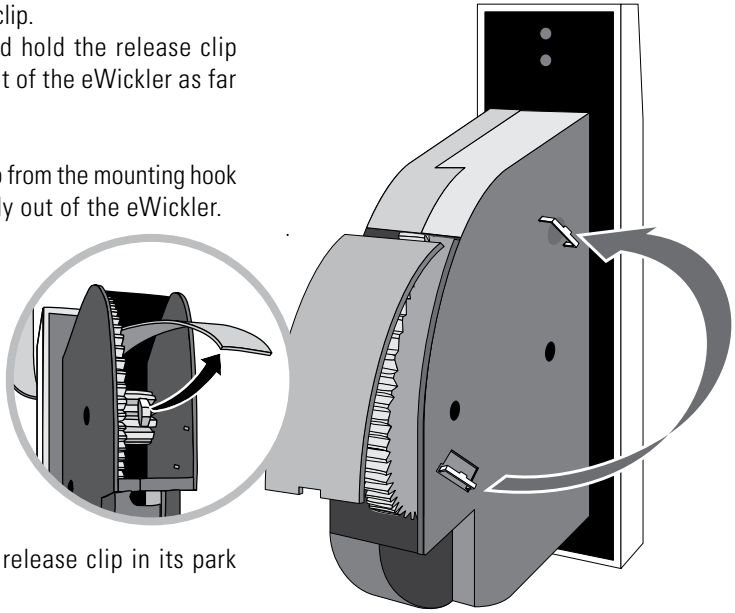

Then reposition the release clip in its park position.

Simplified declaration of conformity

The electric roller shutter belt winder eWickler Comfort fulfils the requirements of the applicable European and national directives.

CE

Conformity has been proven. The full text of the declaration of conformity is in the possession of the manufacturer and is available at the following website address:
www.wir-elektronik.de/service/ce/

WIR elektronik GmbH & Co. KG
Hölderlinstraße 57 - 59
48703 Stadtlohn, Germany

Technical data		
	eW820 / eW840-F	eW825 / eW845-F
Supply voltage	230 V - 50 Hz	
Max. rated power	120 W	
Standby consumption	≤ 0.2 W (eW820/eW825) ≤ 0.5 W (eW840-F/eW845-F)	
Rated torque	11 Nm	17.5 Nm
Rated speed (regulated)	32 rpm	20 rpm
Max. tractive power	50 kg	75 kg
Strap width	15 mm and 23 mm	23 mm
Max. winding capacity	6.3 m	17.6 m
Permissible roller shutter area	10 m² at 3.5 kg/m² 8 m² at 5 kg/m² 4 m² at 10 kg/m²	15 m² at 3.5 kg/m² 12 m² at 5 kg/m² 7 m² at 10 kg/m²
Short-term operation	4 minutes	
Overrun	< 0.2 revolutions	
Protection class	II	
Protection rating	IP20	
Power reserve	approx. 20 h (in case of power failure)	
Housing dimensions in mm	132 x 138 x 34.5	181 x 191 x 34.5
Cover panel dimensions in mm	60 x 210 x 23	60 x 272 x 23

The following data only applies to the eW840-F and eW845-F	
Transmission frequency	868.3 MHz
Transmission power	max. 10 mW
Range in buildings	15-20 m
Range outdoors	max. 200 m
Transmitter	max. 20
Wireless S/D sensor	max. 1

Accessories

An extensive range of accessories is available to adapt the eWickler Comfort to the local conditions. Information on this can be found at the following website address:
www.wir-elektronik.de

Sun sensor eSO371 in 1, 2 and 5 m lengths

WARRANTY CONDITIONS

Manufacturer within the scope of the GPSR EU Product Safety Regulation

WIR elektronik

WIR elektronik GmbH & Co. KG
Hölderlinstraße 57–59,
48703 Stadtlohn, Germany
www.wir-elektronik.de
info@wir-elektronik.de

Warranty conditions
WIR elektronik GmbH & Co. KG provides a 36-month warranty for new devices that have been installed in accordance with the installation instructions. All design defects, material defects and manufacturing defects are covered by the warranty.

The following are excluded from the warranty:

- Incorrect fitting and installation
- Non-observance of the installation and operating instructions
- Improper operation or wear and tear
- External influences such as shocks, impacts or weather conditions
- Repairs and modifications by unauthorised third parties
- Use of unsuitable accessories
- Damage caused by inadmissible excess voltages (e.g. lightning strike)
- Operational malfunctions due to radio frequency overlapping and other radio interference

WIR elektronik will remedy any defects occurring within the warranty period free of charge either by repairing or replacing the parts concerned or by supplying an equivalent or new replacement device.

There is no general extension of the original warranty period by delivery of a replacement or by repair as per the terms of the warranty.

This electrical or electronic device must not be disposed of with household waste at the end of its service life. Free collection points for old electrical devices are available in your neighbourhood, as well as other collection points for the recycling of devices. You can obtain the addresses from your municipal or local authority. Further information can be found at www.elektrogesetz.de.

WIR elektronik

FAULT	POSSIBLE CAUSE / SOLUTION
...the eWickler does not work at all	Check the power supply including the connection cable and plug; If necessary, perform a hardware reset and reset the clock (see page 20 - 21).
...the eWickler does not respond in the morning at the set raising time?	The device electronics have switched off the belt winder because the idler pulley has stopped moving. This is the case if: 1. the lower end point is set too low. The roller shutter is closed, but the strap has unwound further and is no longer taut on the idler pulley. 2. The lower end point has become misaligned due to elongation of the strap. The strap must not become slack at any time. Readjust the lower end point (see page 22) and make sure that the strap is always taut on the idler pulley. The idler pulley must rotate uniformly at all times.
...the roller shutter does not move cleanly to the set end points?	It is possible that the end points have become misaligned due to elongation of the belt. Reset the end points (see page 22).
...the roller shutter stops as soon as the operating button is released?	No end points are set. Set the end points (see page 22).
...the eWickler runs the wrong way?	The strap has been placed incorrecly around the winding wheel (see page 14).

WHAT TO DO IF...

FAULT	POSSIBLE CAUSE / SOLUTION
...the roller shutter stops while moving downwards?	1. Has the roller shutter possibly hit an obstacle? Raise the roller shutter again and remove the obstacle. 2. Have the roller shutter slats shifted? If possible, raise the roller shutter again and align the slats. 3. The roller shutter is rubbing against the window frame in the roller shutter box due to missing pressure rollers or insulating material has come loose and is wedging the roller shutter. Open the roller shutter box and rectify the fault. If necessary, apply lubricating wax to hard-to-move points. 4. The roller shutter may be too light. Weigh down the shutter by inserting a flat bar into the bottom slat, for example.
...the roller shutter suddenly stops while moving upwards?	1. The device's blockage detection has responded, e.g. due to freezing of the roller shutter or other obstacles. Eliminate the cause (e.g. thawing of the frozen roller shutter). 2. Perhaps the roller shutter is not moving smoothly enough. Check the roller shutter guide and the roller shutter. 3. The roller shutter may be too heavy. The maximum tensile force of the eWickler has been exceeded (see page 9).

DISPLAY MESSAGES

Logging on and logging off from radio control units, error while logging on or logging off

Alert from the smoke alarm

Switch-off due to the overheating of the device

Switch-off due to overloading of the device

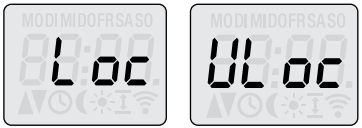

Button lock active / deactivated

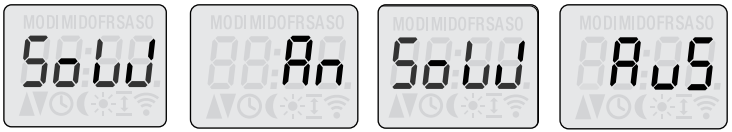

Summer / winter time changeover On / Off

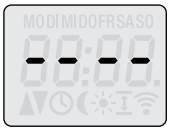

No SD sensor connected/logged on

Enter the postcode for the ASTRO function (commissioning)

Activation of the ASTRO function (Automatic mode setting)

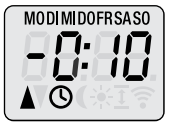

Possibility to change up to 2 hours before or after the astro time

Locking period

As a user of our products, the following information is important for you:

Separate collection of old devices

Electrical and electronic devices that have become waste are referred to as old devices. Owners of old devices must dispose of them separately to unsorted municipal waste. Old devices do not belong in household waste, but in special collection and return systems.

Batteries, rechargeable batteries and lamps

Owners of old devices must separate spent batteries and accumulators that are not enclosed by the old device from the old device before handing them in at a collection point. This also applies to lamps that can be removed from the old device without destroying them. If the old devices are to be prepared for reuse with the involvement of a public waste disposal organisation, batteries, rechargeable batteries and lamps do not have to be removed.

Options for returning old devices

Owners of old devices from private households can hand them in free of charge at the collection points of the public waste disposal authorities or at the return points set up by manufacturers or distributors.
Shops with a sales area of at least 400 m² for electrical and electronic devices and food shops with a total sales area of at least 800 m² that offer electrical and electronic devices several times a year or continuously and place them on the market are obliged to take them back.
This also applies to online or catalogue sales if the warehousing and despatch areas for electrical and electronic devices are at least 400 m² or the total warehousing and despatch areas are at least 800 m². In principle, distributors must guarantee to take back the products through suitable return options at a reasonable distance from the respective end user.
The possibility of returning an old device free of charge exists for distributors subject to the take-back obligation if, among other things, a new similar device that essentially fulfils the same functions is supplied to an end user.
If a new device is delivered to a private household, the old device of the same type can also be handed over there for collection free of charge. In the case of online or catalogue sales, this applies to devices in categories 1, 2 or 4 in accordance with Section 2 (1) of the Electrical and Electronic Equipment Act (ElektroG), namely "heat exchangers", "display devices" or "large devices" (the latter with an external dimension of at least 50 centimetres). End users are asked about their intention to return goods when concluding a purchase contract. In addition, small devices that do not exceed 25 centimetres in any external dimension can be returned free of charge to distributors' collection points, irrespective of the purchase of a new device, and limited to three old devices per device type.

Data protection notice

Old devices often contain sensitive personal data. This applies in particular to information and telecommunications technology devices such as computers and smartphones. In your own interest, please note that each end user is responsible for deleting the data on the old devices to be disposed of.

Meaning of the "crossed-out wheeled bin" symbol

The crossed-out wheeled bin symbol regularly shown on electrical and electronic devices indicates that the device in question must be collected separately from unsorted municipal waste at the end of its service life.

NOTES

NOTES

NOTES

eWICKLER

Comfort eW820, eW825, eW840-F, eW845-F

Electronic belt winder

BA eW8xx_Comfort (07.2025)_4008-000205

WIR elektronik GmbH & Co. KG
Hölderlinstraße 57 - 59
48703 Stadtlohn, Germany
Tel. +49 (0)2563 908930
info@wir-elektronik.de

www.wir-elektronik.de

WIR elektronik